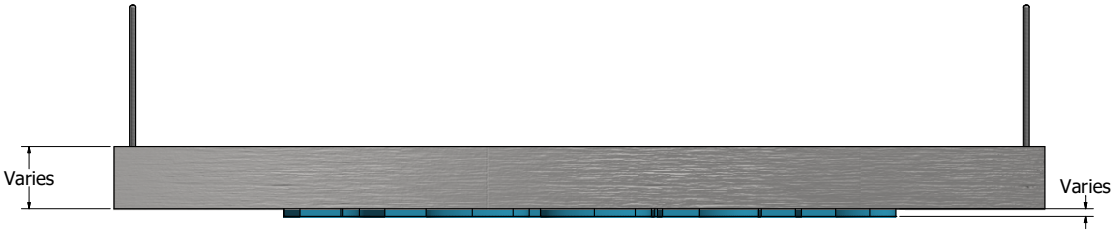

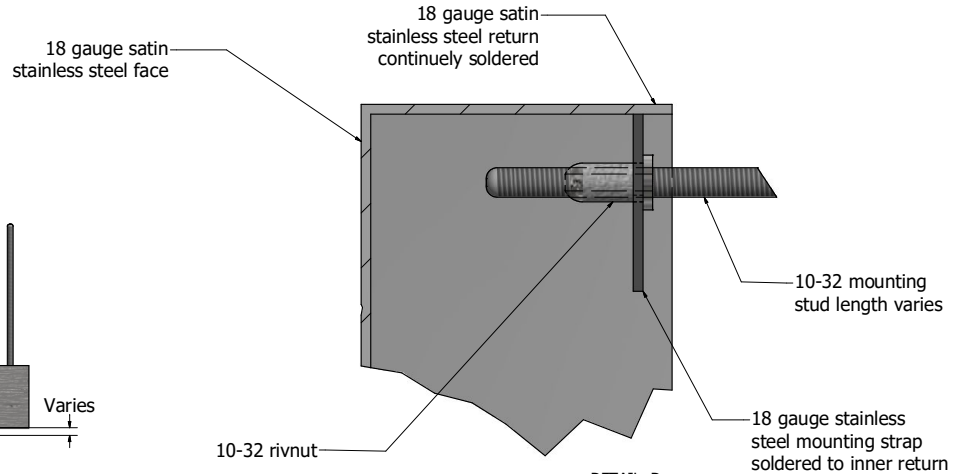

DETAIL D
SCALE 2.5

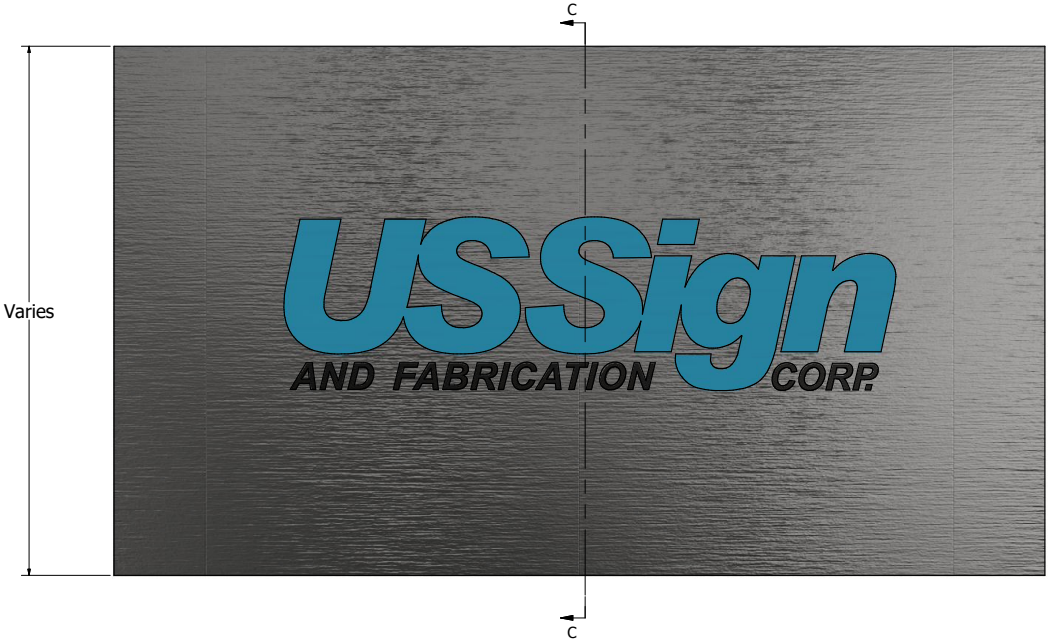

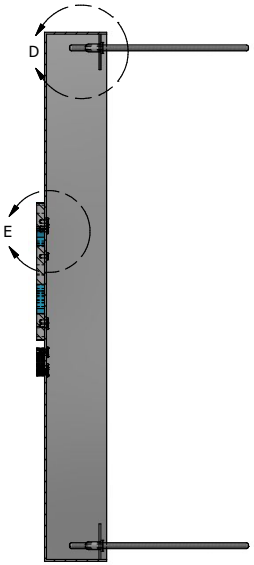

SECTION C-C
SCALE .5

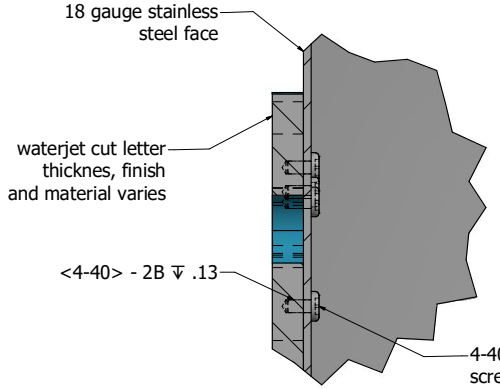

DETAIL E
SCALE 2

DRAWN joe	5/15/2018	
CHECKED		
QA		
MFG		
APPROVED		

TITLE: Fabricated pannel with mechanicly fastend waterjet cut letters stud mount

SIZE D | DWG NO fabricated pannel with waterjet lette | REV

SCALE .5 | SHEET 2 OF 2